Part Modeling: (These images are to be used to answer Questions #3 – 4)

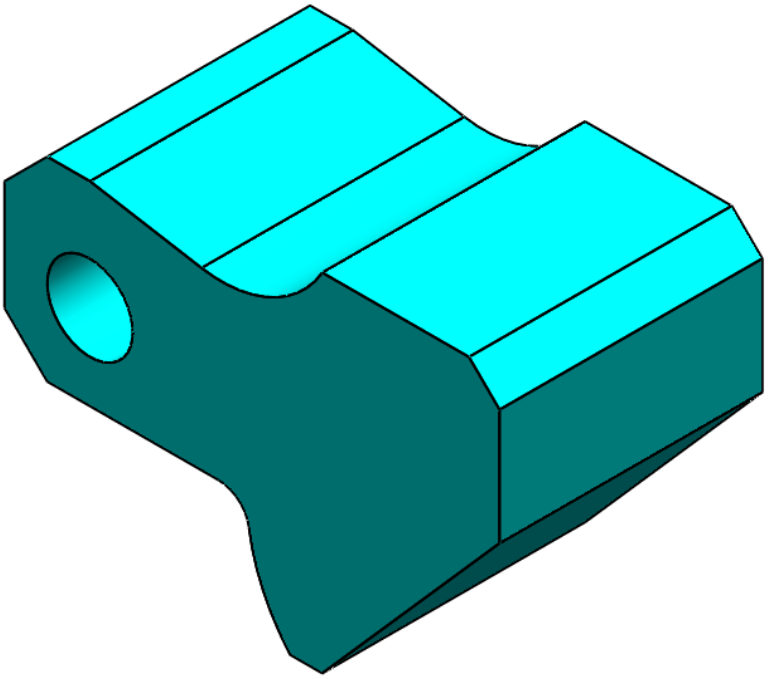

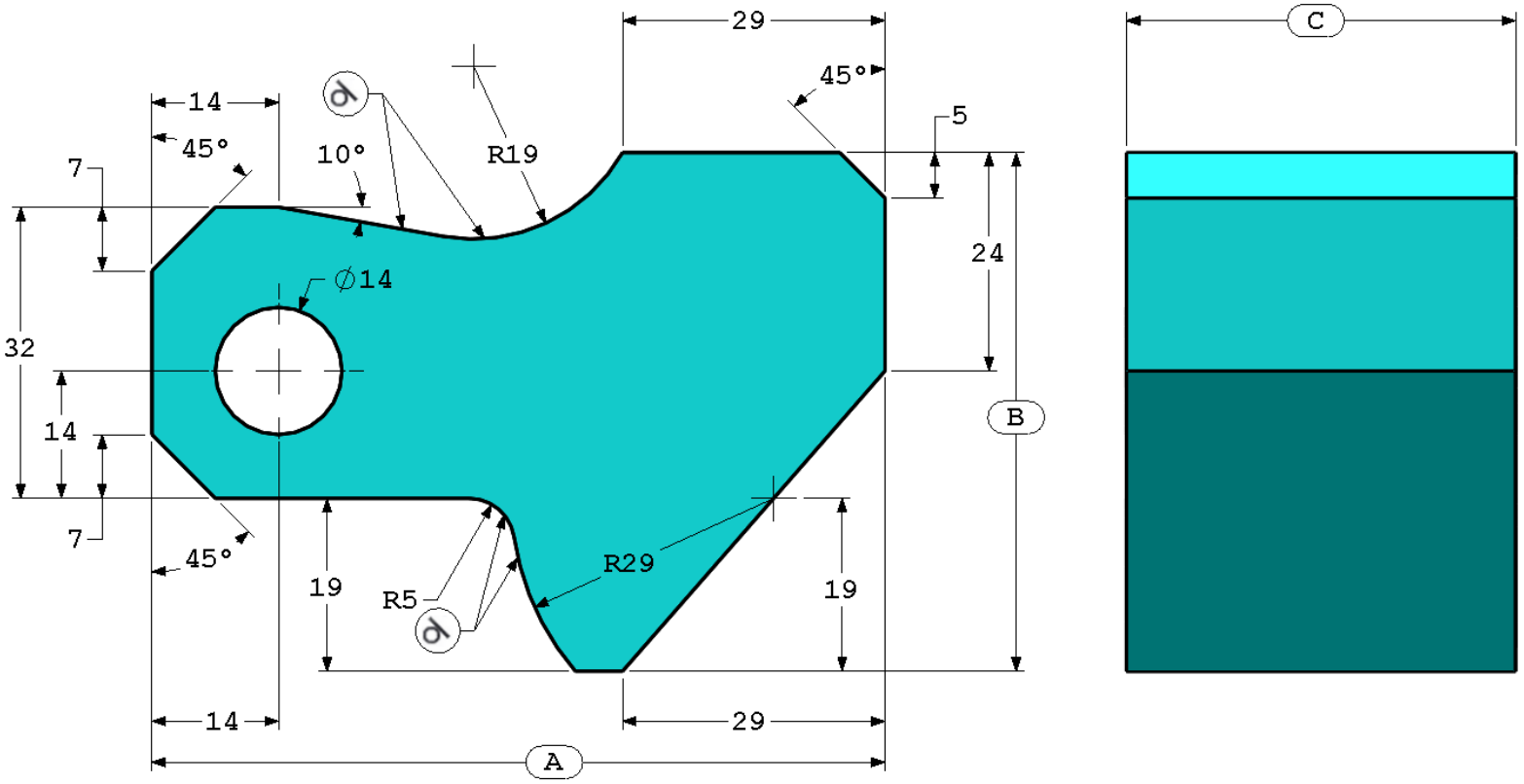

3. Part (Tool Block) - Step 1

Build this part in SolidWorks.
(Save part after each question in a different file in case it must be reviewed)

Unit system: MMGS (millimeter, gram, second)
Decimal places: 2
Part origin: Arbitrary
All holes through all unless shown otherwise.
Material: AISI 1020 Steel
Density = 0.0079 g/mm^3

A = 81.00
B = 57.00
C = 43.00

What is the overall mass of the part (grams)?

Hint: If you don't find an option within 1% of your answer please re-check your solid model.

a) 1028.33
b) 118.93
c) 577.64
d) 939.54

4. Part (Tool Block) - Step 2

Modify the part in SolidWorks.

Unit system: MMGS (millimeter, gram, second)
Decimal places: 2
Part origin: Arbitrary
All holes through all unless shown otherwise.
Material: AISI 1020 Steel
Density = 0.0079 g/mm^3

Use the part created in the previous question and modify it by changing the following parameters:

A = 84.00
B = 59.00
C = 45.00

Note: Assume all other dimensions are the same as in the previous question.

What is the overall mass of the part (grams)?

Part Modeling: (These images are to be used to answer Question #5)

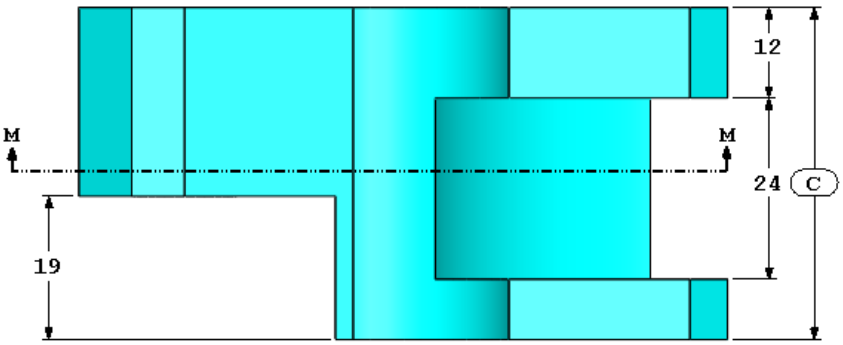

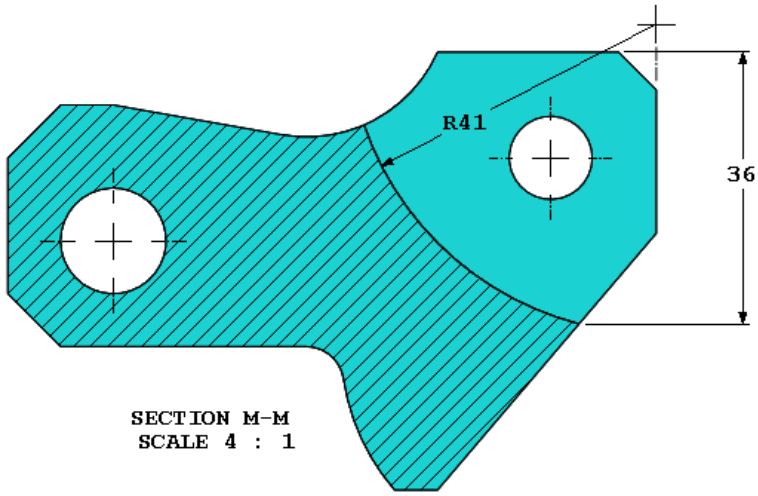

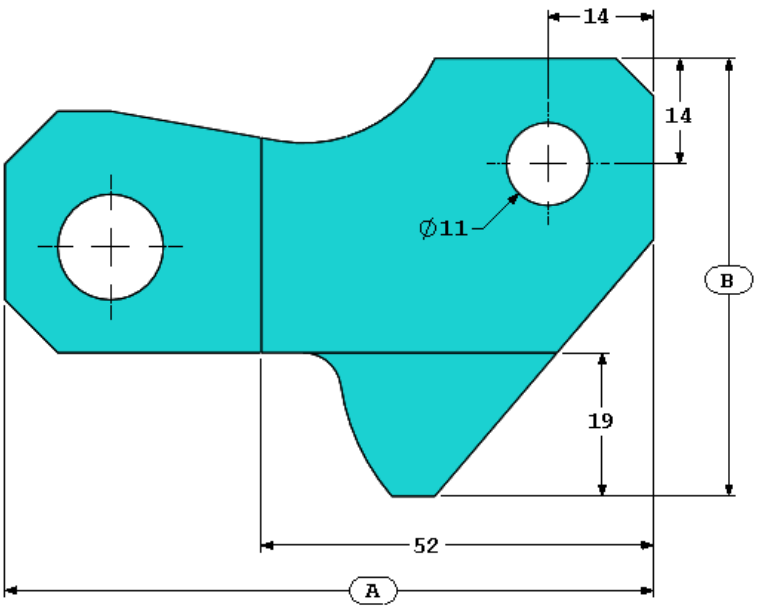

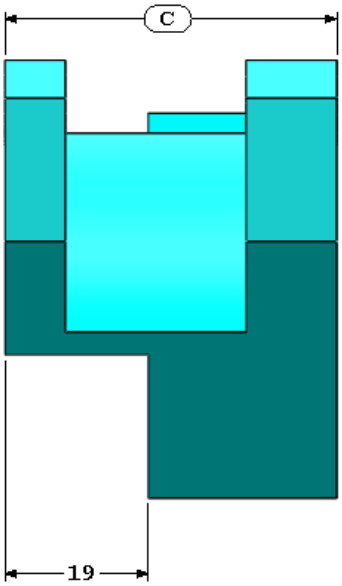

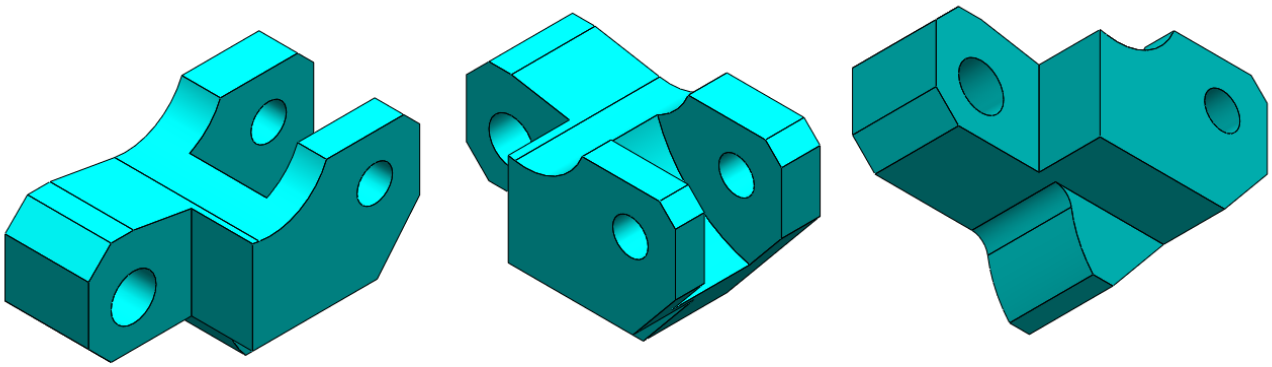

5. Part (Tool Block) - Step 3

Modify this part in SolidWorks.

Unit system: MMGS (millimeter, gram, second)
Decimal places: 2
Part origin: Arbitrary
All holes through all unless shown otherwise.
Material: AISI 1020 Steel
Density = 0.0079 g/mm^3

Use the part created in the previous question and modify it by removing material and also by changing the following parameters:

A = 86.00
B = 58.00
C = 44.00

What is the overall mass of the part (grams)?

Part Modeling: (These images are to be used to answer Question #6)

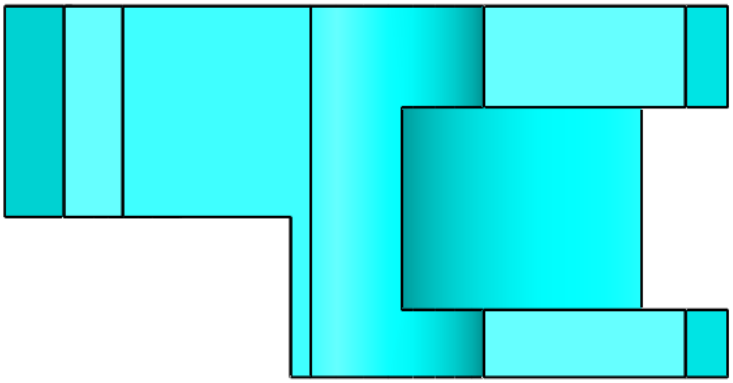

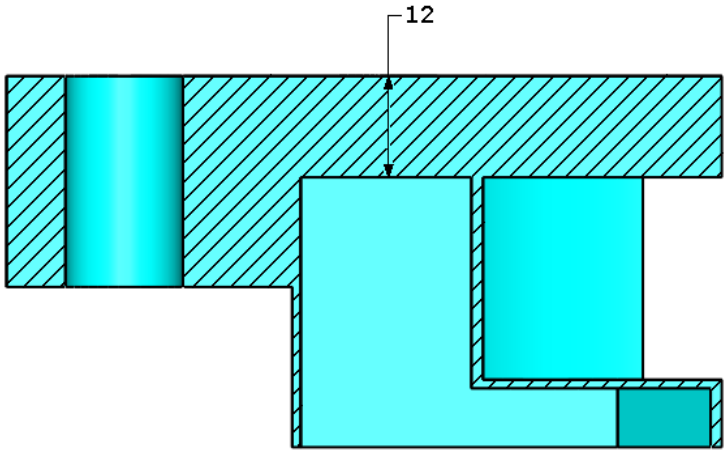

U–U

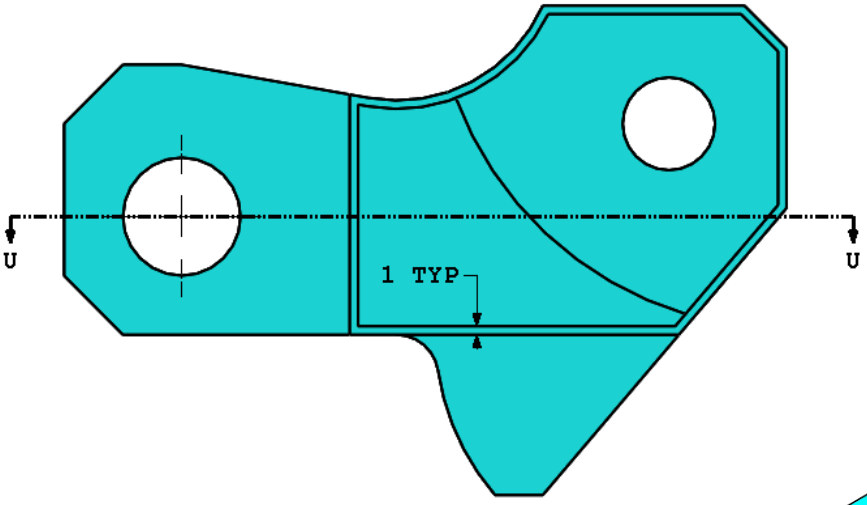

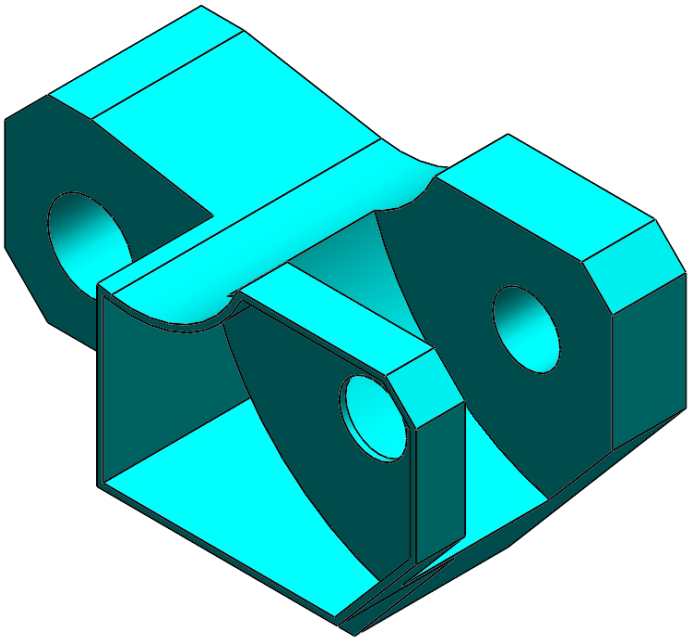

6. Part (Tool Block) - Step 4

Modify this part in SolidWorks.

Unit system: MMGS (millimeter, gram, second)
Decimal places: 2
Part origin: Arbitrary
All holes through all unless shown otherwise.
Material: AISI 1020 Steel
Density = 0.0079 g/mm^3

Use the part created in the previous question and modify it by adding a pocket.

Note 1: Only one pocket on one side is to be added. This modified part is not symmetrical.

Note 2: Assume all unshown dimensions are the same as in the previous question #5.

What is the overall mass of the part (grams)?